PIUSI

# E80 • E120

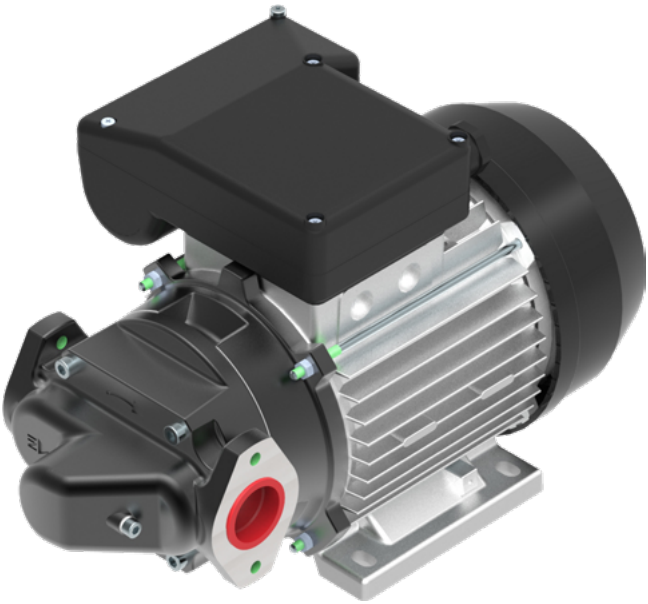

MADE IN ITALY

*Installaltion, use and maintenance manual* EN

BULLETIN M00641 EN_02

# ENGLISH

## 1 INDEX


| | | |
|---|---|---|
| 2 | MACHINE AND MANUFACTURER IDENTIFICATION | 3 |
| 3 | FACSIMILE COPY OF EU DECLARATION OF CONFORMITY | 3 |
| 4 | MACHINE DESCRIPTION | 4 |
| | 4.1 HANDLING AND TRANSPORT | 4 |
| 5 | GENERAL WARNINGS | 5 |
| 6 | SAFETY INSTRUCTIONS | 5 |
| 7 | FIRST AID RULES | 7 |
| 8 | GENERAL SAFETY RULES | 7 |
| 9 | TECHNICAL DATA | 8 |
| 10 | OPERATING CONDITIONS | 9 |
| | 10.1 ENVIRONMENTAL CONDITIONS | 9 |
| | 10.2 ELECTRICAL POWER SUPPLY | 9 |
| | 10.3 DUTY CYCLE | 9 |
| | 10.4 PERMITTED AND NON-PERMITTED FLUIDS | 9 |
| 11 | INSTALLATION | 10 |
| | 11.1 POSITIONING, CONFIGURATIONS AND ACCESSORIES | 10 |
| | 11.2 NOTES ON SUCTION AND DELIVERY LINES | 11 |
| 12 | CONNECTIONS | 12 |
| | 12.1 ELECTRICAL CONNECTIONS | 12 |
| | 12.2 PIPING CONNECTIONS | 13 |
| 13 | INITIAL START-UP | 14 |
| 4 | EVERY DAY USE | 15 |
| 15 | MAINTENANCE | 15 |
| 16 | NOISE LEVEL | 15 |
| 17 | PROBLEMS AND SOLUTIONS | 16 |
| 18 | DEMOLITION AND DISPOSAL | 17 |
| 19 | EXPLODED VIEWS | 17 |
| 20 | OVERALL DIMENSIONS | 18 |


**BULLETIN M00641**

## 2 MACHINE AND MANUFACTURER IDENTIFICATION

| | |
|---|---|
| **AVAILABLE MODELS** | • E80<br>• E120 |
| **MANUFAC-TURER** | PIUSI S.p.A.<br>Via Pacinotti 16/A - Z.I. Rangavino - 46029 Suzzara (Mantova) Italy |

## 3 FACSIMILE COPY OF EU DECLARATION OF CONFORMITY

The undersigned PIUSI S.p.A.
Via Pacinotti 16/A z.i. Rangavino
46029 Suzzara - Mantova - Italy

HEREBY STATES under its own responsibility that the equipment described below:

Description : PUMP FOR THE TRANSFER OF DIESEL FUEL

Model: E80 - E120

Serial number: refer to Lot Number shown on CE plate affixed to product

Year of manufacture: refer to the year of production shown on the CE plate affixed to the product

complies with the following legislation:

- Machinery Regulations
- Electromagnetic compatibility

The technical file is at the disposal of the competent authority following motivated request at PIUSI S.p.A. or following request sent to the e-mail address: doc_tec@piusi.com.

THE ORIGINAL DECLARATION OF CONFORMITY IS PROVIDED SEPARATELY WITH THE PRODUCT



This manual is the property of PIUSI S.p.A. Any reproduction, even partial, is forbidden.

# 4 MACHINE DESCRIPTION

**PUMP** Self-Priming, volumetric, rotating electric vane pump, equipped with by-pass valve.

**MOTOR** Asynchronous motor, single-phase and three-phase, 2 pole, closed type (protection class IP55 in conformance with EN 60034-5-86 regulations) self-ventilated, directly flanged to the pump body.

## 4.1 HANDLING AND TRANSPORT

**Foreword** Due to the limited weight and dimensions of the pumps, special lifting equipment is not required to handle them. The pumps are carefully packed before dispatch. Check the packing when receiving the material and store in a dry place.

**STORAGE**
- Store in a covered and dry place.
- Store the unit away from dirt and vibration

ENVIRONMENTAL CONDITIONS:
Storage humidity: Max 90%
Storage temperature: min -10 °C
Max +50 °C

**PACKAGING** The pump is equipped comes packed suitably for shipment.
On the packaging a label shows the following product information:

- name
- code
- weight

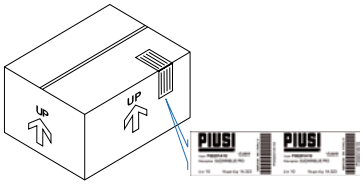


| MODEL | WEIGHT (Kg) | PACKAGING DIMENSION(mm) |
|---|---|---|
| **E 80** | 13 | 355 x 185 x 285 |
| **E120** | 15.6 | 355 x 185 x 285 |

EN

# 5 GENERAL WARNINGS

**Warnings**

To ensure operator safety and to protect the dispensing system from potential damage, workers must be fully acquainted with this instruction manual before attempting to operate the dispensing system.

**Symbols used in the manual**

The following symbols will be used throughout the manual to highlight safety information and precautions of particular importance:

**ATTENTION**
**This symbol indicates safe working practices for operators and/or potentially exposed persons.**

**WARNING**
**This symbol indicates that there is risk of damage to the equipment and/or its components.**

**NOTE**
**This symbol indicates useful information.**

**Manual preservation**

This manual should be complete and legible throughout. It should remain available to end users and specialist installation and maintenance technicians for consultation at any time.

**Reproduction rights**

All reproduction rights are reserved by Piusi S.p.A.
The text cannot be reprinted without the written permission of Piusi S.p.A.
© Piusi S.p.A.
THIS MANUAL IS THE PROPERTY OF Piusi S.p.A.
ANY REPRODUCTION, EVEN PARTIAL, IS FORBIDDEN.

This manual belongs to Piusi S.p.A., which is the sole proprietor of all rights indicated by applicable laws, including, by way of example, laws on copyrights. All the rights deriving from such laws are reserved to Piusi S.p.A.: the reproduction, including partial, of this manual, its publication, change, transcription and notification to the public, transmission, including using remote communication media, placing at disposal of the public, distri·bution, marketing in any form, translation and/or processing, loan and any other activity reserved by the law to Piusi S.p.A..

# 6 SAFETY INSTRUCTIONS

**Mains - preliminary checks before installation**

**ATTENTION**
**You must avoid any contact between the electrical power supply and the fluid that needs to be FILTERED.**

**Maintenance control**

Before any checks or maintenance work are carried out, disconnect the power source.

**FIRE AND EXPLOSION**

When flammable fluids are present in the work area, such as gasoline and windshield wiper fluid, be aware that flammable fumes can ignite or explode.

**To help prevent fire and explosion:**

Use equipment only in will ventilated area.

Keep work area free of debris, including rags and spilled or open containers of solvent and gasoline.

Do not plug or unplug power cords or turn lights on or off when flammable fumes are present.

Ground all equipment in the work area.

Stop operation immediately if static sparking occurs or if you feel a shock. Do not use equipment until you identify and correct the problem.

Keep a working fire extinguisher in the work area.

| | |
|---|---|
| **ELECTRIC SHOCK**<br><br>Electrocution or death | This device must be grounded. Improper grounding setup or usage of the system can cause electric shock. |
| | Turn off and disconnect power cord before servicing equipment. |
| | Connect only to a grounded electrical outlets. |
| | Ensure ground prongs are intact on power and extension cords.<br>Outdoors, use only extensions suitable for the specific use, in accordance with the regulations in force.<br>The connection between plug and socket must remain away from water. |
| | Never touch the electric plug of socket with wet hands. |
| | Do not turn the device on if the power connection cord or other important parts of the apparatus are damaged, such as the inlet outlet plumbing, dispensing nozzle or safety devices. Replace damaged components before operation. |
| | For safety reasons, we recommend that, in principle, the equipment be used only with a earth-leakage circuit breaker (max 30 mA). |
| | Electrical connections must use ground fault circuit interrupter (GFCI). |
| | Installation operations are carried out with the box open and accessible electrical contacts. All these operations have to be done with the unit isolated from the power supply to prevent electrical shock! |
| **EQUIPMENT MISUSE**<br>Misuse can cause death or serious injury | Do not operate the device when fatigued or under the influence of drugs or alcohol. |
| | Do not leave the work area while device is energized or under pressure. |
| | Turn off all device when is not in use. |
| | Do not alter or modify thr device. Alterations or modifications may void agency approvals and create safety hazards. |
| | Route hoses and cables away from traffic areas, sharp edges, moving parts, and hot surfaces. |
| | Do not kink or over bend hoses or use hoses to pull device. |
| | Keep children and animals away from work area. |
| | Comply with all applicable safety regulations. |
| | Do not exceed the maximum operating pressure or the temperature of the part with lower nominal value of the system. See Technical Data in all equipment manuals. |
| | Use fluids and solvents that are compatible with the wetted part of the system. See Technical Data in all equipment manuals. Read the manufacturer's instructions of the fluids and solvents. For more information on the material, request the safety data sheet (MSDS) from the distributor or dealer. |
| | Check the device every day. Immediately repair or replace worn or damaged parts only with original spare parts of the manufacturer. |
| | Make sure the equipment is classified and approved compliant with the standards of the environment where it is used. |
| | Use the equipment only for the intended use. Contact your distributor for more information. |
| | Keep hoses and cables far from traffic areas, sharp edges, moving parts and hot surfaces. |
| | Do not bend or overbend the hoses or use the hose to pull the device. |
| **TOXIC FLUID OR FUMES HAZARD** | Read MSDS's to know the specific hazards of the fluids you are using. |
| | Store hazardous fluid in approved containers, and dispose of it according to applicable guidelines. |
| | Prolonged contact with the treated product may cause skin irritation: always wear protective gloves during dispensing. |

EN

## 7 FIRST AID RULES

**Electrocution**

disconnect the unit from the mains, or use a dry insulator as protection while moving the electrocuted person far from any conductor. Do not touch the electrocuted person with bare hands until he/she is far from any conductor. Ask qualified and trained people for help immediately

**SMOKING PROHIBITED**

When operating the pump and in particular during refuelling, do not smoke and do not use open flame.

## 8 GENERAL SAFETY RULES

**Essential protective equipment characteristics**

Wear protective equipment that is:
- suited to the operations that need to be performed;
- resistant to cleaning products.

**Personal protective equipment that must be work**

safety shoes;

close-fitting clothing;

protective gloves;

safety goggles.

**Other equipment**

instruction manual

**Protective gloves**

Prolonged contact with the treated product may cause skin irritation; always wear protective gloves during dispensing.

This manual is the property of PIUSI S.p.A. Any reproduction, even partial, is forbidden.

# 9 TECHNICAL DATA

| | E80 M | E80 T | E120 M | E120 T | | E120M | |
|---|---|---|---|---|---|---|---|
| **Voltage/Frequency (V/Hz)** | 230/50 | 400/50 | 230/50 | a | 400/50 | a | 110/50 |
| | | | | b | 460/60 | b | 120/60 |
| **Absorption (A)** | 3,5 | 1,6 | 6 | a | 2 | a | 8 |
| | | | | b | 2,2 | b | |
| **Power (W)** | 500 | 550 | 750 | a | 750 | a | 830 |
| | | | | b | 1000 | b | 1000 |
| **RPM** | 1400 | 1450 | 1450 | a | 1450 | a | 1450 |
| | | | | b | 1750 | b | 1750 |
| **Nominal Flow Rate (l/min)** | 80 | 80 | 110 | a | 110 | a | 80 |
| | | | | b | 130 | b | 100 |
| **Max pressure (bar)** | 2,4 | 2 | 2,8 | 2,8 | | a | 2,5 |
| | | | | | | b | 2,8 |
| **Type of Service** S1: continuous; S3: periodic intermittent | S1 | S1 | S1 | S1 | | S1 | |
| **Motor Protection** | IP55 | IP55 | IP55 | IP55 | | IP55 | |

**ATTENTION**

**Operating conditions of the declared data**
**Fluid: Diesel Fuel**
**Temperature: 20°C**
**Suction Conditions: The tube and the pump position relative to the fluid level is such that a pressure of 0.3 bar is generated at the nominal flow rate.**
**Under different suction conditions higher pressure values can be created that reduce the flow rate compared to the same back pressure values. To obtain the best performance, it is very important to reduce loss of suction pressure as much as possible by following these instructions:**
- **Shorten the suction tube as much as possible**
- **Avoid useless elbows or throttling in the tubes**
- **Keep the suction filter clean**
- **Use a tube with a diameter equal to, or greater than, indicated (see Installation)**

# 10 OPERATING CONDITIONS

## 10.1 ENVIRONMENTAL CONDITIONS

| | |
|---|---|
| **TEMPERATURE** | min. -4 °F / max +140 °F<br>min. -20 °C / max +60 °C |
| **RELATIVE HUMIDITY** | max. 90% |
| **ATTENTION** | **The temperature limits shown apply to the pump components and must be respected to avoid possible damage or malfunction.** |

## 10.2 ELECTRICAL POWER SUPPLY

| | |
|---|---|
| **NOTE** | Depending on the model, the pump must be supplied by a single-phase alternating current line whose nominal values are shown in the table in Paragraph "TECHNICAL DATA".<br>The maximum acceptable variations from the electrical parameters are:<br>Voltage:+/- 5% of the nominal value<br>Frequency:+/- 2% of the nominal value |
| **ATTENTION** | **Power from lines with values outside the indicated limits can damage the electrical components.** |

## 10.3 DUTY CYCLE

| | |
|---|---|
| **NOTE** | The electrical pumps E80 and E120 are designed for continuous use under conditions of maximum back pressure. |
| **ATTENTION** | **Functioning under by-pass conditions is only allowed for brief periods of time (2-3 minutes maximum).Whenever a particular installation carries the risk of functioning in by-pass mode for longer periods of time, it is necessary that the by-passed flow not be recirculated inside the pump, but be returned to the suction tank.** |

## 10.4 PERMITTED AND NON-PERMITTED FLUIDS

| | | |
|---|---|---|
| **FLUIDS PERMITTED** | • DIESEL FUEL at a viscosity of from 2 to 5.35 cSt (at a temperature of 37.8°C), Minimum Flash Point (PM): 55°C, according to UNI EN 590<br>• Paraffinic HVO/XTL: EN 15940 | |
| | ONLY FOR BIO DIESEL VERSIONS F00326BXX (B100):<br>• BIO DIESEL B100 (FAME) according to UNI EN 14214<br>• BIO DIESEL B20/B30 according to EN 16709 | |
| **FLUIDS NON PERMITTED AND RELATED DANGERS** | - GASOLINE | - FIRE - EXPLOSION |
| | - INFLAMMABLE LIQUIDS with PM < 55°C | - FIRE - EXPLOSION |
| | - LIQUIDS WITH VISCOSITY > 20 cSt | - MOTOR OVERLOAD |
| | - WATER | - PUMP OXIDATION |
| | - FOOD LIQUIDS | - CONTAMINATION OF THE SAME |
| | - CORROSIVE CHEMICAL PRODUCTS | - PUMP CORROSION<br>- INJURY TO PERSONS |
| | - SOLVENTS | - FIRE - EXPLOSION<br>- DAMAGE TO GASKET SEALS |

EN

This manual is the property of PIUSI S.p.A. Any reproduction, even partial, is forbidden.

# 11 INSTALLATION

**ATTENTION**

**The pump must never be operated before the delivery and suction lines have been connected.**

**PRELIMINARY INSPECTION**

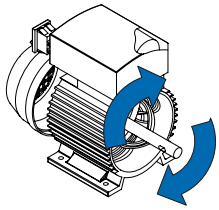

- Verify that all components are present. Request any missing parts from the manufacturer.
- Check that the pump has not suffered any damage during transport or storage.
- Carefully clean the suction and delivery inlets and outlets, removing any dust or other packaging material that may be present.
- Check that the electrical data corresponds to those indicated on the data plate.
- Always install in an illuminated area.
- Make sure that the motor shaft turns freely. .

## 11.1 POSITIONING, CONFIGURATIONS AND ACCESSORIES

**NOTE**

In the case of installation in the open air, proceed to protect the pump by providing a protection roof.

The pump can be installed in any position (pump axis vertical or horizontal)

The pump must be secured in a stable way using the holes on the bed of the motor and vibration damping devices.

**ATTENTION**

**THE MOTORS ARE NOT OF THE ANTI-EXPLOSIVE-TYPE. Do not install them where inflammable vapours could be present.**

**NOTE**

The broad range of pump accessories make it suitable for many different uses, installations and applications. The supporting base can be positioned in different ways.

The pumps are furnished without line acces-sories. Following is a list of the most common line accessories whose use is compatible with the proper functioning of the pumps.

| DELIVERY | SUCTION |
|---|---|
| - Automatic dispensing nozzle<br>- Manual dispensing nozzle<br>- MeterFlexible tubing | - Foot valve with filter<br>- Rigid and flexible tubing<br>- Pump suction filter |

**ATTENTION**

**It is the responsibility of the installer to provide the necessary line accessories to ensure the correct and safe operation of the pump. The accessories that are not suitable to be used with the previously indicated material could damage the pump and/or cause injury to persons, as well as causing pollution.**

**ATTENTION**

**To maximise performance and prevent damage that could affect pump operation, always demand original accessories.**

## 11.2 NOTES ON SUCTION AND DELIVERY LINES

**DELIVERY**

| | |
|---|---|
| **Foreword** | The choice of pump model must be made keepingthe characteristics of the system in mind. |
| **EFFECTS ON FLOW RATE** | Length and diameter of pipe, flow rate of dispensed liquid, accessories fitted, can create back pressures above those allowed. In this case, the pump mechanical control (bypass) will trip to reduce the flow rate. |
| **HOW TO REDUCE EFFECTS ON FLOW RATE** | To avoid these problems, system flow resistances must be reduced using shorter and/or larger diameter pipes, as well as line accessories with low resistances (e.g., automatic nozzle for higher flow rates). |

**SUCTION**

| | |
|---|---|
| **Foreword** | The pumps are self-priming and characterized by good suction capacity. During the start-up phase, with an empty suction tube and the pump wetted with fluid, the electric pump unit is capable of suctioning the liquid with a maximum difference in height of 2 meters. |
| **NOTE** | It is important to point out that the priming time can be as long as one minute and the presence of an automatic dispensing nozzle on the delivery line prevents the evacuation of air from the installation, and, therefore, prevents proper priming. For this reason, it is always advisable to prime the pump without an automatic delivery nozzle, verifying the proper wetting of the pump. |
| **WARNING** | The installation of a foot valve is recommended to prevent the emptying of the suction tube and keep the pump wet. In this way, the pump will subsequently always start up immediately. |
| **CAVITATION** | When the system is functioning, the pump can work with pressure at the inlet as high as 0.5 bar, beyond which cavitation phenomena can begin, with a consequent loss of flow rate and increase of system noise and pump damage. . |
| **HOW TO PREVENT CAVITATION** | It is important to ensure low vacuums at suction mouth by using:<br>- short pipes with larger or identical diameter to that recommended<br>- reduce bends to the utmost<br>- use large-section suction filters<br>- use foot valves with minimum possible resistance<br>- keep the suction filters clean because, when they become clogged, they increase the resistance of the system. |
| **WARNING** | The difference in height between the pump and the fluid level must be kept as small as possible and, at any rate, within the 2 meters anticipated for the priming phase. If this height is exceeded, it will always be necessary to install a foot valve to allow for the filling of the suction tube and provide tubing of wider diameter. It is recommended that the pump not be installed at a difference in height greater than 3 meters. |
| **ATTENTION** | **In the case that the suction tank is higher than the pump, it is advisable to install an anti-siphon valve to prevent accidental diesel fuel leaks. Dimension the installation in order to control the back pressures due to water hammering.** |

EN

This manual is the property of PIUSI S.p.A. Any reproduction, even partial, is forbidden.

# 12 CONNECTIONS

## 12.1 ELECTRICAL CONNECTIONS

***ATTENTION***

**IT IS THE INSTALLER'S RESPONSIBILITY TO CARRY OUT THE ELECTRICAL CONNECTIONS IN COMPLIANCE WITH THE RELEVANT STANDARDS.**

***WARNING***

Comply with the following (not exhaustive) instructions to ensure a proper electrical connection:

***ATTENTION***

**- During installation and maintenance make sure that power supply to the electric lines has been turned off.**
**- Use cables with minimum sections, rated voltages and installation type that are suitable for the characteristics indicated in paragraph "TECHNICAL DATA" and the installation environment.**
**- Always make sure that the cover of the terminal strip box is closed before switching on the power supply, after having checked the integrity of the seal gaskets that ensure the IP55 protection grade.**
**- All motors are equipped with a grounding terminal that is to be connected to the ground line of the electrical system.**

**ATTENTION**

**- Verify that the terminal strip blades are positioned according to the diagram provided for the available power supply voltage.**
**- Verify the correct direction of rotation of the motor (see the paragraph overall dimensions), and, if not correct, invert the connection of the two cables in the power supply plug or on the terminal strip.**
**- The pumps are supplied without electrical safety equipment such as fuses, motor protectors, systems to prevent accidental restarting after power failures or others. It is indispensable to install an electric panel, upstream from the pump's power supply line, equipped with an appropriate residual current operated circuit breaker. It is the installer's responsibility to perform the electrical connections with respect for the applicable regulations.**

**NOTE**

The characteristics of the capacitor are shown on the identification plate for each pump model. he switch has the sole function of starting/ stopping the pump and cannot in any way substitute for the main circuit breaker provided for in the applicable regulations.

**ATTENTION**

**Verify that the terminal strip blades are positioned according to the diagram provided for the available power supply voltage.**

**SINGLE-PHASE MOTORS**

Single-phase motors are supplied with a pre-existing 2 - meter cable with electric plug. To change the cable, open the terminal strip cover and connect the line according to the following diagram.
Single-phase motors are supplied with a bi-polar switch and capacitor wired and installed inside the terminal strip box (see diagram).

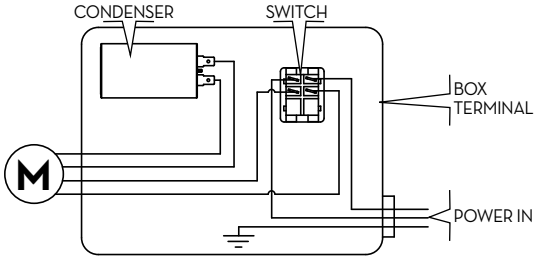

EN

**THREE-PHASE MOTORS**

Three-phase motors are supplied with a terminal strip box and terminal strip. To connect the electric motor to the electric power line, open the terminal strip cover and connect the cables according to the diagram.

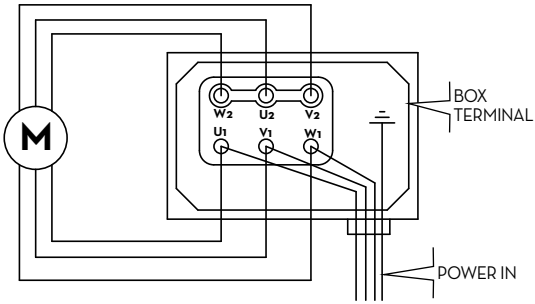


## 12.2 PIPING CONNECTIONS

**FOREWORD**

- Before carrying out any connection, refer to the visual indications i.e. arrow on the pump head, to identify suction and delivery.

**ATTENTION**

**Wrong connection can cause serious pump damage.**

**PRELIMINARY INSPECTION**

- Check that the machine has not suffered any damage during transport or storage.
- Clean the inlet and outlet openings, removing any dust or residual packing material.
- Make sure that the motor shaft turns freely.
- Check that the electrical specifications correspond to those shown on the identification plate.

**CONNECTING**

- Before connection, make sure that the tubing and the suction tank are free of dirt and thread residue that could damage the pump and its accessories.
- Before connecting the delivery tube, partially fill the pump body with diesel fuel to facilitate priming.
- Do not use conical threaded joints that could damage the threaded pump openings if excessively tightened.

**SUCTION TUBING**

- Minimum recommended nominal diameter:
1" 1/4 - E80
1" 1/2 - E120
- Nominal recommended pressure:
10 bar
- Use tubing suitable for functioning under suction pressure.
- Use tubing suitable to resist back pressures of 0.8 bar

**DELIVERY TUBING**

- Minimum recommended nominal diameter: 1"
- Nominal recommended pressure: 10 BAR

**ATTENTION**

**It is the installer's responsibility to use tubing with adequate characteristics.**
**The use of tubing unsuitable for use with Diesel fuel can damage the pump, injure persons and cause pollution. Loosening of the connections (threaded connections, flanging, gasket seals) can cause serious ecological and safety problems.**
**Check all the connections after the initial installation and on a daily basis after that. Tighten the connections, if necessary.**

**NOTE**

Screw M8, tightening torque 25 Nm

This manual is the property of PIUSI S.p.A. Any reproduction, even partial, is forbidden.

# 13 INITIAL START-UP

**FOREWORD**

- Check that the quantity of fluid in the suction tank is greater than the amount you wish to transfer.
- Make sure that the residual capacity of the delivery tank is greater than the quantity you wish to transfer.
- Make sure that the piping and line accessories are in good condition.
- Always install a suction filter to protect the pump.

**ATTENTION**

**Do not run the pump dry for more than 20 minutes. This can cause serious damage to its components.**

**Fluid leaks can damage objects and injure persons.**

**NOTE**

- Never start or stop the pump by connecting or cutting out the power supply
- Single-phase motors are provided with an automatic thermal protection switch.

**ATTENTION**

**Extreme operating conditions can raise the motor temperature and, consequently, cause the thermal protection switch to stop it. Turn off the pump and wait for it to cool before resuming use. The thermal protection automatically turns off when the motor is sufficiently cool.**

**ATTENTION**

**During the priming phase, the pump must discharge all the air that is initially present from the delivery line. Therefore it is necessary to keep the outlet open to permit the evacuation of the air.**

**WARNING**

**If an automatic type dispensing nozzle is installed on the end of the delivery line, the evacuation of the air will be difficult because of the automatic stopping device that keeps the valve closed. It is recommended that the automatic nozzle be temporarily removed during initial start-up.**

**IF THE PUMP DOES NOT PRIME**

Depending on the system characteristics, the priming phase can last from several seconds to a few minutes. If this phase is prolonged, stop the pump and verify:
- that the pump is not running completely dry (fill with fluid from the delivery line);
- that the suction pipe guarantees against air infiltration;
- that the suction filter is not clogged;
- that the suction height is not higher than 2 mt.
- that all air has been released from the delivery pipe.

**AT THE END OF THE INITIAL START-UP**

When priming has occurred, verify that the pump is operating within the anticipated range, in particular:
- that under conditions of maximum back pressure, the power absorption of the motor stays within the values shown on the identification plate;
- that the suction pressure is not greater than 0.5 bar;
- that the delivery back pressure does not exceed the maximum back pressure for the pump.

EN

## 4 EVERY DAY USE

**USE PROCEDURE**

1. If using flexible tubing, attach the ends of the tubing to the tanks. In the absence of an appropriate slot, solidly grasp the delivery tube before beginning dispensing.
2. Before starting the pump make sure that the delivery valve is closed (dispensing nozzle or line valve).
3. Turn the ON/OFF switch to ON. The by-pass valve allows functioning with the delivery closed for only brief periods.
4. Open the delivery valve, solidly grasping the end of the tubing.
5. Close the delivery valve to stop dispensing.
6. When dispensing is finished, turn off thepump.

**ATTENTION**

**To avoid damaging the pump, after use, make sure the pump is off.**
**In case of a power break, switch the pump off straight away.**

**Functioning with the delivery closed is only allowed for brief periods (2-3 minutes maximum). After use, make sure the pump is turned off.**

**LACK OF ELECTRIC POWER**

A lack of electric power, with the consequent accidental stopping of the pump, can be caused by:
- A safety device tripping
- A drop in line voltage

In either case, act as follows:

1. Close the delivery valve
2. Attach the end of the delivery to the slot provided on the tank
3. Turn the ON/OFF switch to the OFF position.
   Resume operations as described in Paragraph DAILY USE, after determining the cause of the stoppage.

## 15 MAINTENANCE

**Safety instructions**

E80 and E120 pumps are designed and constructed to require a minimum of maintenance. Before carrying out any maintenance work, disconnect the dispensing system from any electrical and hydraulic power source. During maintenance, the use of personal protective equipment (PPE) is compulsory.
In any case always bear in mind the following basic recommendations for a good functioning of the pump

**Authorised maintenance personnel**

All maintenance must be performed by qualified personnel. Tampering can lead to performance degradation, danger to persons and/or property and may result in the warranty being voided.

**ONCE A WEEK:**

- Check that the pipe connections are not loose to prevent any leaks;
- Check and keep the filter installed on the suction line clean.

**ONCE A MONTH:**

- Check the pump body and keep it clean and free of any impurities;
- Check and keep the pump filter clean and any other filters installed.
- Check that the electrical supply cables are in good condition.

## 16 NOISE LEVEL

In normal operating conditions, noise emissions of all models do not exceed 80 dB(A) at a distance of 1 metre from the electric pump.

This manual is the property of PIUSI S.p.A. Any reproduction, even partial, is forbidden.

# 17 PROBLEMS AND SOLUTIONS

For any problems contact the authorised dealer nearest to you.

| PROBLEM | POSSIBLE CAUSE | CORRECTIVE ACTION |
|---|---|---|
| **THE MOTOR IS NOT TURNING** | Lack of electric power | Check the electrical connections and the safety systems. |
| | Rotor jammed | Check for possible damage or obstruction of the rotating components. |
| | The motor protecting thermalswitch has tripped | Wait for the motor to cool, verify that it restarts, and research the cause of the overheating |
| | Motor problems | Contact the Service Department |
| **THE MOTOR TURNS SLOWLY WHEN STARTING** | Low voltage in the electric powerline | Bring the voltage back within the anticipated limits |
| **LOW OR NO FLOW RATE** | Low level in the suction tank | Refill the tank |
| | Foot valve blocked | Clean and/or replace the valve |
| | Filter clogged | Clean the filter |
| | Excessive suction pressure | Lower the pump with respect to the level of the tank or increase the cross-section of the tubing |
| | High loss of head in the circuit(working with the by-pass open) | Use shorter tubing or of greaterdiameter |
| | By-pass valve blocked | Dismantle the valve, clean and/or replace it |
| | Air entering the pump or thesuction tubing | Check the seals of the connections |
| | A narrowing in the suction tubing | Use tubing suitable for workingunder suction pressure |
| | Low rotation speed | Check the voltage at the pump.Adjust the voltage and/or use cablesof greater cross-section |
| | The suction tubing is resting on the bottom of the tank | Raise the tubing |
| **INCREASED PUMP NOISE** | Cavitation occurring | Reduce suction pressure |
| | Irregular functioning of the by-pass | Dispense until the air is purged from the circuit |
| | Air present in the diesel fuel | Verify the suction connections |
| **LEAKAGE FROM THE PUMP BODY** | Seal damaged | Check and replace the mechanical seal |
| **THE PUMP DOES NOT PRIME THE LIQUID** | Suction circuit blocked | Remove the blockage from the suction circuit |
| | Malfunction of foot valve fitted on suction circuit | Replace foot valve |
| | The suction chambers are dry | Add liquid from pump delivery side |
| | The pump chambers are dirty or blocked | Remove the blockages from the suction and delivery valves |

EN

## 18 DEMOLITION AND DISPOSAL

| | |
|---|---|
| **Foreword** | If the system needs to be disposed, the parts which make it up must be delivered to companies that specialize in the recycling and disposal of industrial waste and, in particular: |
| **Disposing of packing materials** | The packaging consists of biodegradable cardboard which can be delivered to companies for normal recycling of cellulose. |
| **Metal Parts Disposal** | Metal parts, whether paint-finished or in stainless steel, can be consigned to scrap metal collectors. |
| **Disposal of electric and electronic components** | These must be disposed of by companies that specialize in the disposal of electronic components, in accordance with the indications of directive 2012/19/EU (see text of directive below). |
| **Information regarding the environment for clients residing within the European Union** | European Directive 2012/19/EU requires that all equipment marked with this symbol on the product and/or packaging not be disposed of together with non-differentiated urban waste. The symbol indicates that this product must not be disposed of together with normal household waste. It is the responsibility of the owner to dispose of these products as well as other electric or electronic equipment by means of the specific refuse collection structures indicated by the government or the local governing authorities. |
| | Disposing of RAEE equipment as household wastes is strictly forbidden. Such wastes must be disposed of separately. |
| | Any hazardous substances in the electrical and electronic appliances and/or the misuse of such appliances can have potentially serious consequences for the environment and human health. |
| | In case of the unlawful disposal of said wastes, fines will be applicable as defined by the laws in force. |
| **Miscellaneous parts disposal** | Other components, such as pipes, rubber gaskets, plastic parts and wires, must be disposed of by companies specialising in the disposal of industrial waste. |

## 19 EXPLODED VIEWS

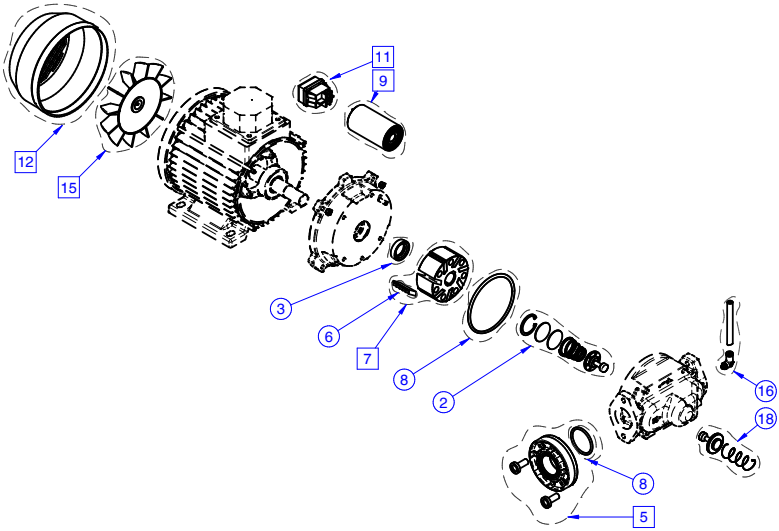


This manual is the property of PIUSI S.p.A. Any reproduction, even partial, is forbidden.

## 20 OVERALL DIMENSIONS

**E80 M**

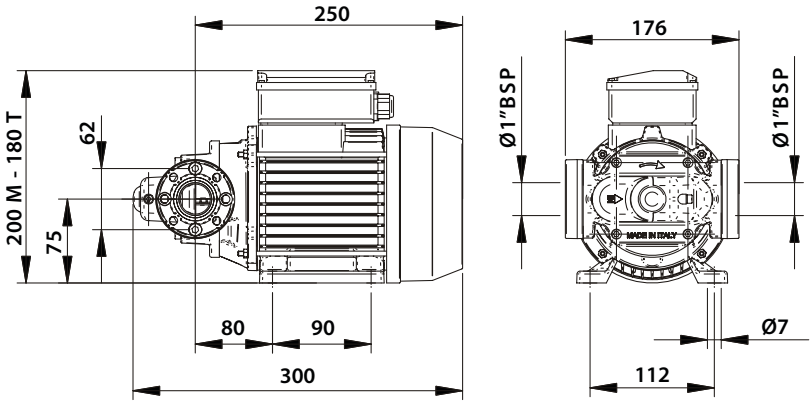


DIRECTION OF ROTATION

**E120 M**

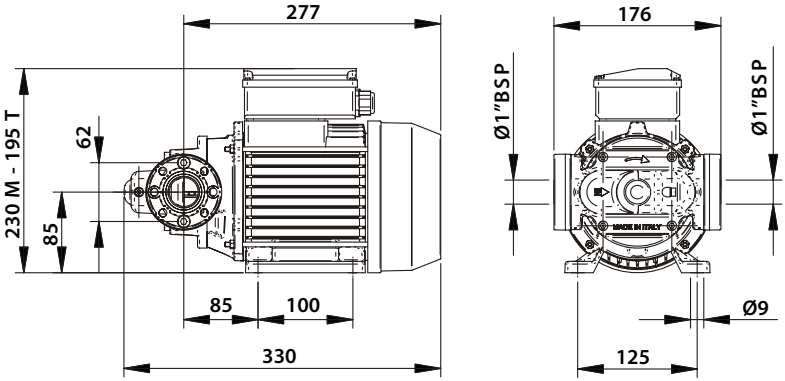


DIRECTION OF ROTATION

IT Scarica il manuale nella tua lingua!
EN Download the manual in your language!
CS Stáhnout příručku ve vašem jazyce!
DA Download manualen på dit sprog!
DE Laden Sie das Handbuch in Ihrer Sprache herunter!
ES ¡Descarga el manual en tu idioma!
FI Lataa käsikirja omalla kielelläsi!
FR Téléchargez le manuel dans votre langue!
NL Download de handleiding in uw taal!
PL Pobierz instrukcję w swoim języku!
PT Baixe o manual em seu idioma!
RU Загрузите руководство на вашем языке

https://www.piusi.com/support/search-manuals

PIUSI

piusi.com
PIUSI SpA • Suzzara MN Italy

BULLETIN M00641 EN_02

05.2025