CUBE

FEATURES

- STURDY STRUCTURE
- MECHANICAL METER
- INDUCTION THERMAL-PROTECTED MOTOR
- OVERLOAD PROTECTION
- BUILT-IN MESH FILTER
- IP 55

The PIUSI CUBE is a range of mechanical fuel transfer dispenser for non-commercial use, composed of a self-priming vane pump fitted with integrated bypass valve, automatic nozzle with swivel connection and integrated nozzle holder with start/stop pump lever. Its versatility allows different applications: on walls, on tanks, on cisterns, on drums or stand-alone (with the optional pedestal).

PERFORMANCE

UP TO 90 L/MIN — FLOW RATE	AC/DC VOLTAGE — POWER
±1% — ACCURACY	





CUBE 56 WITH FILTER



CUBE 56 WITH PEDESTAL (OPTIONAL)

PACKAGING

CODE	WEIGHT		PACKAGING			N. BOXES / EUROPALLET	
	KG	LBS	MM	INCH	PCS/BOX	✈	🚢
F00575400	22	46	400X400X460	-	1	12	24
00057500C	21	46	400X400X460	-	1	12	24
F00576000C	21	46	400X400X460	-	1	12	24
F00577000C	21	46	400X400X460	-	1	12	24
F00591200	22	48	400X400X460	-	1	12	24
F00591000A	21	46	400X400X460	-	1	12	24
F00591111A	21	46	400X400X460	-	1	12	24
F00592000	22	46	400X400X460	-	1	12	24

ANY BIODIESEL AIR ANTIFREEZE AdBlue® BIODIESEL **DIESEL** FOOD GASOLINE GREASE KEROSENE OIL WATER WINDSCREEN

CHART

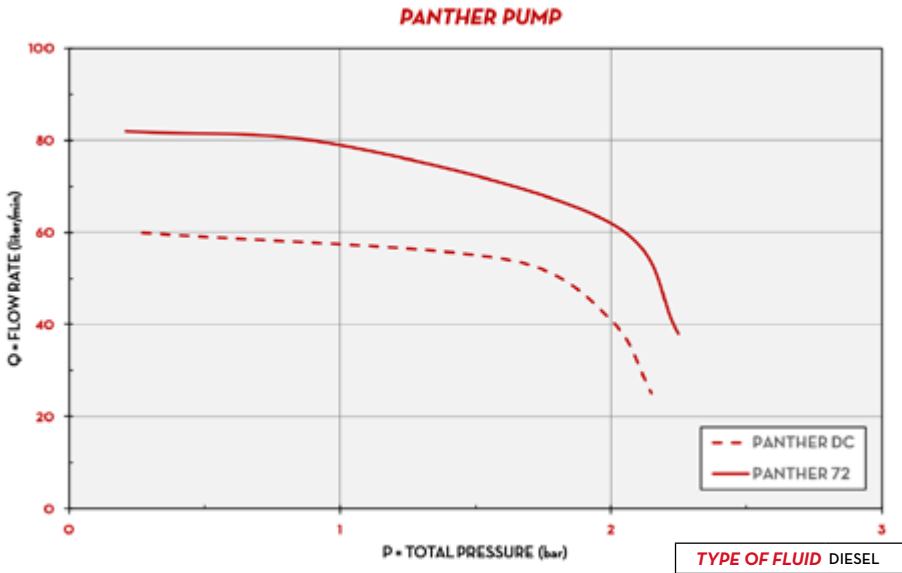

TYPE OF FLUID	DIESEL
TEMPERATURE	+20 / -6°C

IN THE BOX

- CUBE DISPENSER
- AUTOMATIC NOZZLE
- DELIVERY HOSE
- INSTRUCTION MANUAL

DETAILS



NUTATING DISK METER



K33/K44

DIMENSIONS

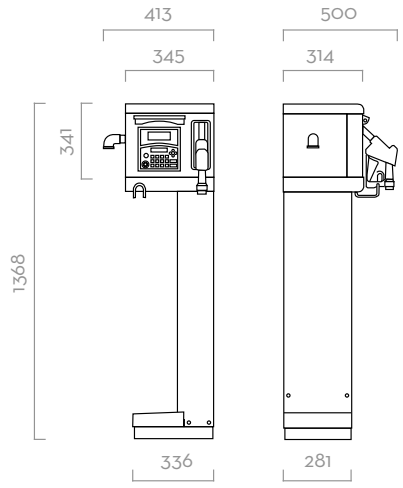

Dimensions expressed in millimeters

COMPONENTS

- PUMPS:
  PANTHER AC
  PANTHER DC
- METER:
  K33 / K44
- NOZZLE:
  AUTOMATIC NOZZLE

TECHNICAL DATA

CODE	DESCRIPTION	FLUIDS TYPE	FLOW RATE		VOLTAGE			PUMP	METER	NOZZLE	FILTER		INLET	HOSE	
			L/MIN	GPM	AC V./HZ DC VOLT	POWER WATT	AMP. MAX.	TYPE	TYPE	TYPE	H2O FILTER	FILTERING CAPACITY	BSP	LENGTH	Ø
F00575400	CUBE 56/33 + FILTER	D	56	15	230/50	350	3	PANTH 56	K33	A60	YES	30 µ	1"	6M	3/4"
00057500C	CUBE 56/33	D	56	15	230/50	350	3	PANTH 56	K33	A60	NO	-	1"	4M	3/4"
F00576000C	CUBE 56 DC 12V	D	56	15	12	300	35	PANTH DC	K33	A60	NO	-	1"	4M	1"
F00577000C	CUBE 70 DC 24V	D	70	18	24	420	25	PANTH DC	K33	A60	NO	-	1"	4M	3/4"
F00591200	CUBE 70/33 + FILTER	D	70	18	230/50	500	4,2	PANTH 72	K33	A60	YES	30 µ	1"	6M	1"
F00591000A	CUBE 70/33	D	70	18	230/50	500	4,2	PANTH 72	K33	A60	NO	-	1"	4M	1"
F00591111A	CUBE 70/44 PULSER	D	70	18	230/50	500	4,2	PANTH 72	K44	A60	NO	-	1"	4M	1"
F00592000*	CUBE 90/44	D	90	23,8	230/50	700	4,9	PANTH 90	K44	A120	NO	-	1"	4M	1"

UPON REQUEST IT IS AVAILABLE WITH DIFFERENT VOLTAGES AND 50/60 HZ FREQUENCY
*DUTY CYCLE 30MIN ON/OFF