PIUSI

Fluid Handling Innovation

CUBE

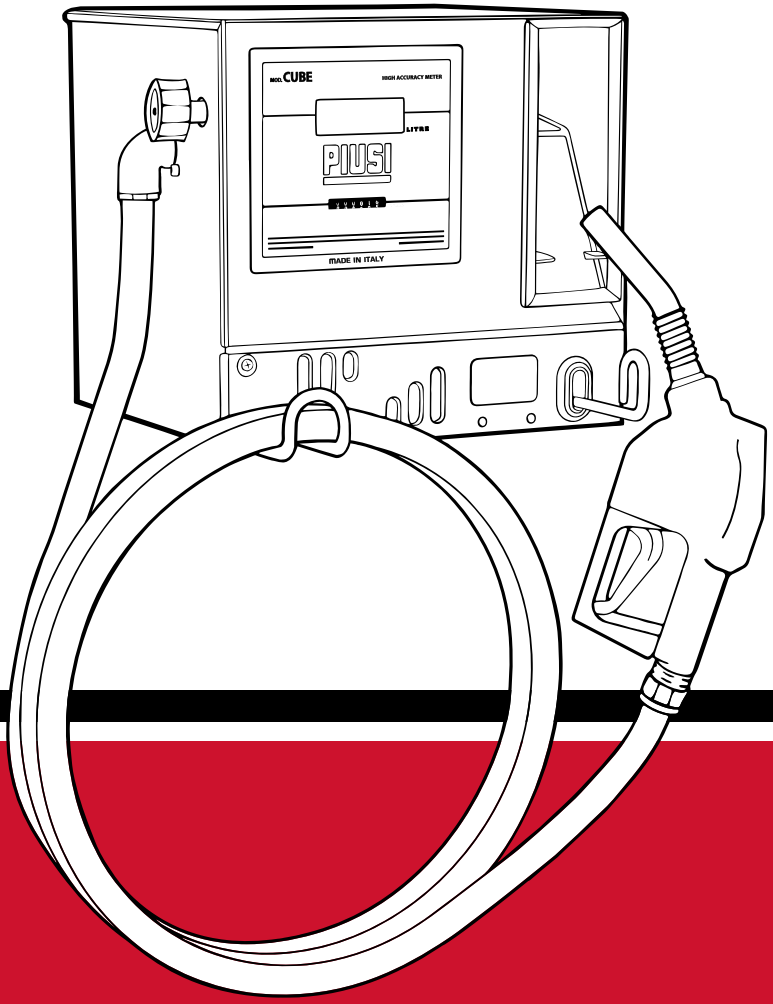

MADE IN ITALY

Installation, use and maintenance manual

BULLETIN M0097E _ 01 EN

ENGLISH

BULLETIN M0097E

EN

TABLE OF CONTENTS

1. Facsimile copy of EU declaration of conformity **4**
2. General information **5**
3. General warnings for dispencers **5**
4. Safety information **6**
4.1. First aid rules **9**
4.2. General safety rules **9**
5. Transport, handling and unpacking **10**
5.1. Disposal **10**
6. Using and looking after manuals **11**
7. **CUBE** dispenser **12**
7.1. **CUBE** components **13**
7.2. Technical specifications **14**
7.3. Permitted uses **15**
7.4. Not permitted uses **15**
8. Environmental conditions **16**
9. Installation **16**
9.1. Mechanical installation **18**
9.2. Hydraulic connections **18**
9.3. Electrical connections **19**
10. Starting **20**
11. Instructions for use **23**
12. Maintenance **24**
13. Troubleshooting **26**
14. Spare parts **27**
15. Manufacturer's details and after-sales service **29**

This manual is the property of PIUSI S.p.A. Any reproduction, even partial, is forbidden.

1. FACSIMILE COPY OF EU DECLARATION OF CONFORMITY

The undersigned PIUSI S.p.A.
Via Pacinotti 16/A z.i. Rangavino
46029 Suzzara - Mantova - Italy

HEREBY STATES under its own responsibility that the equipment described below:
Description : DIESEL FUEL DISPENSER
Model: **CUBE 56 - CUBE 70 - CUBE 90 - CUBE DC**
Serial number: refer to Lot Number shown on CE plate affixed to product
Year of manufacture: refer to the year of production shown on the CE plate affixed to the product
complies with the following legislation:
- Machinery Regulations
- Electromagnetic compatibility

The technical file is at the disposal of the competent authority following motivated request at PIUSI S.p.A. or following request sent to the e-mail address: doc_tec@piusi.com.

THE ORIGINAL DECLARATION OF CONFORMITY IS PROVIDED SEPARATELY WITH THE PRODUCT

⚠ The **CUBE** dispensing units described in this manual are for professional use only.

EN

2. GENERAL INFORMATION

CUBE dispensers are appliances designed for the private distribution of diesel fuel for motor transport. Featuring absolute safety and ease of use, **CUBE** dispensers are extremely reliable high-performance ready-to-use units that are fast to install. All models in the series share the solid metal frame and self-priming pumps, while they differ in terms of the types of flow meter (mechanical or electronic) and the presence on certain models of an electronic delivery management system.
CUBE's strengths lie in the reliability of the pumping units, the metering precision of product dispensed, and the high performance of the management systems.

THE PERSONNEL WHO USE THE DISPENSER AND THE TECHNICAL SUPPORT PERSONNEL MUST BE FAMILIAR WITH THE FIRST AID AND SAFETY RULES DESCRIBED IN THIS MANUAL.
Keep this technical manual in a place that is familiar and accessible to all the personnel who have access to the dispenser.

3. GENERAL WARNINGS FOR DISPENCERS

Important precautions

To ensure operator safety and to protect the pump from potential damage, workers must be fully acquainted with this instruction manual before performing any operation.

Symbols used in the manual

The following symbols will be used throughout the manual to highlight safety information and precautions of particular importance:

WARNING

This symbol indicates safe working practices for operators and/or potentially exposed persons.

ATTENTION

This symbol indicates that there is risk of damage to the equipment and/or its components.

NOTE

This symbol indicates *useful information.*

This manual is the property of PIUSI S.p.A. Any reproduction, even partial, is forbidden.

Manual preservation

This manual should be complete and legible throughout. It should remain available to end users and specialist installation and maintenance technicians for consultation at any time.

Reproduction rights

All reproduction rights are reserved by PIUSI S.p.A.
The text cannot be reprinted without the written permission of PIUSI S.p.A.
© PIUSI S.p.A.
THIS MANUAL IS THE PROPERTY OF PIUSI S.p.A..
ANY REPRODUCTION, EVEN PARTIAL, IS FORBIDDEN.

4. SAFETY INFORMATION

Mains - preliminary checks before installation and maintenance control

WARNING

You must avoid any contact between the electrical power supply and the fluid.

Before any checks or maintenance work are carried out, disconnect the power source.

Fire and explosion

WARNING

When flammable fluids are present in the working area, such as gasoline and windshield wiper fluid, be aware that flammable fumes can ignite or explode. To help prevent fire and explosions:

- use equipment only in well ventilated area;
- keep working area free of debris, including rags and spilled or open containers of solvent and gasoline;
- do not plug or unplug power cords or turn lights on or off when flammable fumes are present;
- ground all equipment in the working area;
- stop operation immediately if static sparking occurs or if you feel a shock, do not use equipment until you identify and correct the problem;
- keep a working fire extinguisher in the working area.

Electric shock





WARNING

Danger of electrocution and death.

This equipment must be grounded. Improper grounding, setup or usage of the system can cause electric shock.

Turn off and disconnect power cord before servicing equipment.

Connect only to grounded electrical outlets.

Use only 3 wire extension cords in accordance with local electrical codes. Extension cords should have a ground lead.

Ensure ground prongs are intact on power and extension cords.

Do not expose to rain. Store indoors. Never touch the electric plug of socket with wet hands.

Do not turn the dispensing system on if the power connection cord or other important parts of the apparatus are damaged, such as the inlet-outlet plumbing, dispensing nozzle or safety devices. Replace damaged components before operation.

Before each use check that the power connection cord and power plug are not damaged. If damaged, have power connection cord replaced before use by a qualified electrician. The electrical connection between the plug and socket must be kept well away from water.

Unsuitable extension leads can be hazardous, in accordance with current regulations. Only extension cords that are labelled for outdoor use and have a sufficient conduction path should be used outdoors.

For safety reasons, we recommend that equipment be used only with a earth-leakage circuit breaker (max 30 mA).

Electrical connections must use ground fault circuit interrupter (GFCI).

This manual is the property of PIUSI S.p.A. Any reproduction, even partial, is forbidden.

Equipment misuse

WARNING

Do not operate the unit when fatigued or under the influence of drugs or alcohol.

Do not leave the working area while equipment is energized or under pressure.

Turn off all equipment when equipment is not in use.

Do not alter or modify equipment. Alterations or modifications may void agency approvals and create safety hazards. Route hoses and cables away from traffic areas, sharp edges, moving parts, and hot surfaces.

Do not kink or over bend hoses or use hoses to pull equipment.

Keep children and animals away from working area.

Comply with all applicable safety regulations.

Burn hazard



WARNING

Equipment surfaces and fluid that is heated can become very hot during operation: to avoid severe burns do not touch hot fluid or equipment.

Toxic fluid or fumes hazard



WARNING

Read MSDS's to know the specific hazards of the fluids you are using.

Store hazardous fluid in approved containers, and dispose of it according to applicable guidelines.

Prolonged contact with the treated product may cause skin irritation: always wear protective gloves during dispensing.



WARNING

Do not smoke or use open flames during dispensing operations.

EN

4.1 FIRST AID RULES

Contact with the product

In the event of problems developing following EYE/SKIN CONTACT, INHALATION or INGESTION of the treated product, please refer to the SAFETY DATA SHEET of the fluid handled.

Persons who have ingested toxic liquids

Whenever fuel has been swallowed, do not induce vomiting, but have the injured person drink large quantities of milk or water.

Persons who have suffered electric shock

Disconnect the power source, or use a dry insulator to protect yourself while you move the injured person away from any electrical conductor. Avoid touching the injured person with your bare hands until he is far away from any conductor. Immediately call for help from qualified and trained personnel.

NOTE

Please refer to the safety data sheet for the product. In all cases, seek medical attention immediately.

4.2 GENERAL SAFETY RULES

Essential protective equipment characteristics

Wear protective equipment according to the info below:
· suited to the operations that need to be performed;
· resistant to cleaning products.

Personal protective equipment that must be worn

Wear the following personal protective equipment during handling and installation:


safety shoes


protective gloves


close-fitting clothings


safety goggles


Use Instruction Manual

This manual is the property of PIUSI S.p.A. Any reproduction, even partial, is forbidden.

5. TRANSPORT, HANDLING AND UNPACKING

CUBE is shipped inside stackable cardboard packaging.

Dimensions of packaging:
H = 480 mm / L = 380 mm / D = 380 mm
Weight of packaging: 1,8 kg

Total weight:
CUBE 56/33 = 21,3 kg
CUBE 70/33 = 24,0 kg
CUBE DC 12V = 22,0 kg
CUBE DC 24V = 22,0 kg
CUBE 90/44 = 24,3 kg

When the machine is not used, whether it is packed or unpacked, it must be stored in a place protected from the weather (rain, damp, sun, etc.) and from dust. To remove the cardboard packaging, use a pair of scissors or cutters, being careful not to damage the appliance. Fully open the packaging and take out the **CUBE** so that it can be taken to the place of final installation. Due to the weight of **CUBE**, the product should be removed from its packaging by 2 persons. Moreover, 2 persons should also attend to the positioning, fixing and installation phase. Once the packaging has been removed, the station must always be kept in vertical position. Packaging parts (cardboard, wood, cellophane, etc.) must be placed in specific containers and not left lying around or within reach of children, as these represent a potential risk hazard. They must be disposed of according to the regulations applicable in the country of use. Check the integrity of the machine by making sure the shipped parts are not damaged in any way that could affect safety and operation. In case of any doubts, do not start the appliance but contact the manufacturer's after-sales service.

5.1 DISPOSAL

Foreword

The components must be given to companies specializing in disposal and recycling of industrial waste.

Disposal of packaging

The packaging consists of biodegradable cardboard which can be delivered to companies specializing in normal recycling of cellulose.

Metal parts disposal

Metal parts, whether paint-finished or in stainless steel, can be consigned to scrap metal collectors.

Disposal of electric and electronic components

These have to be disposed by companies that are specialised in the disposal of electronic components, in accordance with the instructions of **2002/96/EC** (*see text of directive next paragraph*).

Information regarding the environment for clients residing within the European Union



European Directive 2002/96/EC requires that the equipement bearing this symbol on the product and/or its packaging must not be disposed of with unsorted municipal waste. The symbol indicates that this product should be disposed of separately from regular household waste streams.
It is your responsibility to dispose of this and other electric and electronic equipment via designated collection facilities appointed by the government or local authorities.

Disposal of other parts

The disposal of other parts such as pipes, rubber seals, plastic components and cables should be entrusted to companies specializing in disposal of industrial waste.

6. USING AND LOOKING AFTER MANUALS

This manual is common to all **CUBE** models and illustrates the main characteristics of the various models, providing information on:
· *electrical and mechanical installation;*
· *first start up operations;*
· *daily use.*

This manual is an integral and essential part of the product and, as provided by **EEC directive 89/392**, **must be given to persons in charge of using and servicing the machine**, to ensure fulfillment of the provisions relating to training/information referred to in **EEC directive 89/391**. **Carefully read the instructions contained in these manuals**, as these are most important for installation safety, operation and maintenance.

This manual is the property of PIUSI S.p.A. Any reproduction, even partial, is forbidden.

The manufacturer disclaims all liability for injury to persons or damage to things, or to machine, in the event of this being used in a way different to that indicated in the instructions. Look after this manual carefully in a place protected from damp, heat, dust, oils, greases, etc., as it will be useful for future reference and consultation. Do not remove, tear or amend any parts of the manual for any reason. In case of loss or damage, ask the manufacturer for a copy, quoting the manual code. **This manual must always remain with the machine;** in the event of the machine being sold, it must be given to the new user. The company reserves the right to change **CUBE** features and specifications at any time.

7. CUBE DISPENSER

Equipment and features are:
- self-priming rotary vane pump with incorporated by-pass valve;
- motor with protection grade IP55 and thermal protection, 230 V AC single-phase (version Panther 56/72/90);
- brush motor powered by continuous current, low voltage, with intermittent cycle, closed type, IP55 protection class according to CEI EN60034-5, flange-mounted directly to the pump body (version Panther DC);
- four meters of anti-static rubber hose for fuel;
- automatic type dispensing nozzle with on/off switch integrated into the nozzle rest;
- steel body with anti-corrosion treatment and paint finish;
- 110/120 V AC-60 Hz motor on request.

CUBE dispenser is equipped with a **K series** mechanical type meter.

K33/ K44 meter

K series meters are mechanical oscillating disk meters designed to allow the precise measurement of diesel fuel.
The meter is provided with a non-resettable counter in litres and a partial resettable indicator: the partial indicator has three/four digits and the total indicator has six digits.

Self-priming pump and motor

CUBE dispensers are equipped with selfpriming, volumetric, electric rotary vane pumps for the transfer of diesel fuel, provided with a by-pass valve. Such a valve allows functioning for brief periods of time even with the dispensing nozzle closed. The motor coupled directly to the pump body is an internal fan-cooled single-phase asynchronous AC unit in the case of **CUBE 56/72/90**, and a DC motor in the case of **CUBE DC**.

EN

Nozzle

The nozzle supplied with **CUBE** is automatic and fitted with a shut-off device for full tank.

Identification label

CUBE stations feature an identification plate, attached to the left side of the dispenser, showing:
· *manufacturer;*
· *model;*
· *lot number / production year;*
· *technical specifications;*
· *CE mark.*



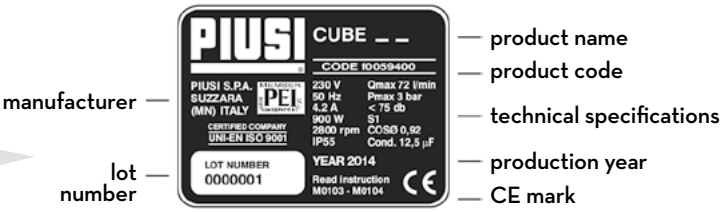

WARNING

Before installing, always make sure the dispenser model is correct and suitable for the available power supply (Voltage/Frequency).

7.1 CUBE COMPONENTS

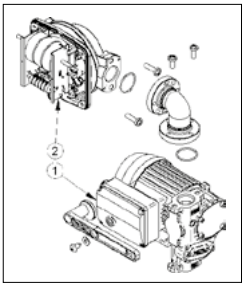

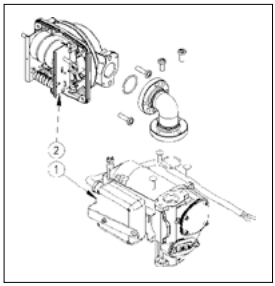

The pictures aside show the **CUBE** components. In particular, those components that distinguish the various models of the **CUBE** product line are numbered and described.

1 · *Pump-Motor unit*
2 · *Meter*

This manual is the property of PIUSI S.p.A. Any reproduction, even partial, is forbidden.

7.2 TECHNICAL SPECIFICATIONS

CUBE dispenser model	Supply voltage	Flow rate (l/m)	Duty cicle
CUBE 56/33 > 230/50	230 V / 50 Hz - 1~	55	S1 (CONTINUO)
CUBE 56/33 > 230/60	230 V / 60 Hz - 1~	55	S1 (CONTINUO)
CUBE 56/33 > 110/50	110 V / 50 Hz - 1~	55	S1 (CONTINUO)
CUBE 56/33 > 110/60	110 V / 60 Hz - 1~	55	S1 (CONTINUO)
CUBE 70/33* > 230/50	230 V / 50 Hz - 1~	70	S1 (CONTINUO)
CUBE 90/44* > 230/50	230 V / 50 Hz - 1~	90	S3 (30" ON - 30" OFF)
CUBE DC 12V	12 V DC	50	S3 (30" ON - 30" OFF)
CUBE DC 24V*	24 V DC	55	S3 (30" ON - 30" OFF)

Shown performances are relevant to the inlet pressure loss of 0,2 bar.

ATTENTION

Operation in bypass mode is permitted only for short periods (2/3 minutes max.).
The flow rate value is referred to the following operating conditions:
fluid: diesel fuel
temperature: 20°C

Suction conditions: the suction line and pump position with respect to the fluid level is such as to create a 0.6 bar vacuum at nominal flow rate.

With different suction conditions higher vacuum values may be created thus reducing the flow rate considering the same back-pressure values.

To obtain the highest performance it is essential to limit pressure drops on the suction line as far as possible by observing the following recommendations:
· shorten the suction line as much as possible;
· avoid elbows and restrictions;
· keep the suction strainer clean;
· use hose of recommended diameter or larger (see installation).

The pump burst pressure is 20 bar.

EN

K33/ K44 meter Partial meter indicator: 3/4-digit resettable.
Main total indicator: 6-digit not resettable.

Meter accuracy **K33/K44** meters, after correct calibration in the field, provide the following performances:
ACCURACY: +/- 1% (after calibration, for flow rates over 10 l/min).

7.3 PERMITTED USES

Transfer of:
- Diesel fuel with a viscosity from 2 to 5.35 cStat 37.8°C and PM flash point > 55°C.
- Paraffinic HVO/XTL: EN 15940

7.4 NOT PERMITTED USES

The transfer of fluids with different characteristics than those indicated is not allowed. In particular:

NOT permitted fluids	Related danger
Petrol	Fire/explosion
Inflammable liquids with PM < 55°C	Fire/explosion
Water	Pump oxidation
Food liquids	Contamination of the same
Liquids with viscosity > 20 cSt	Motor overload
Corrosive chemical products	Pump corrosion and/or injury to persons
Solvents	Fire/explosion and/or damage to gasket seals

This manual is the property of PIUSI S.p.A. Any reproduction, even partial, is forbidden.

8. ENVIRONMENTAL CONDITIONS

Working temperature: -20°C min., +45°C max.;
Relative humidity: 90% max.

ATTENTION

The specified limit temperatures apply to the pump components and must be complied with to avoid possible damage or faults. Extreme operating conditions can cause a motor temperature rise with consequent shutdown due to tripping of the overload circuit-breaker. Switch off the pump and wait for it to cool before resuming operation. The overload circuit-breaker resets automatically when the motor has cooled sufficiently.

9. INSTALLATION

Package content

1 · **CUBE**
2 · *Valve/filter kit (may not be present, depending on the version).*
3 · *Nozzle*
4 · *Hose*









Opening

Screw off the screws.

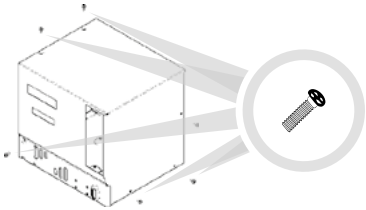

Reset knob



Put the knob on the guide and push thoroughly.

EN

Pulling out the hose support hook

1 · Loosen the fixing screws.
2· Extract the hose-carrier.
3· Fix it into the required position by tightening the screws.



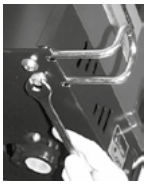

Installing the hose and nozzle

Use a suitable dope for the threads.



CUBE dispenser can be installed outside. Nevertheless, it is advisable to locate it under the shelter of a roof to ensure the dispenser's longevity and provide greater comfort during refuelling in the event of bad weather. The installation of the dispenser must be carried out by skilled personnel and performed according to the instructions provided in this chapter.

Dispensing system installation diagram

The maximum length of the hose must conform to "Attention" box provided on the following page.
CUBE can be installed: (a) above tank, (b) at tank level.

Minimum hose diameter: 1"

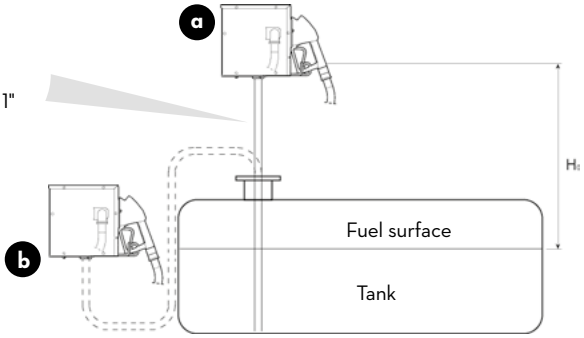

NOTE

The **H₀** difference in height between the fuel surface and the pump in the dispenser must not be higher than 3 m!

This manual is the property of PIUSI S.p.A. Any reproduction, even partial, is forbidden.

9.1 MECHANICAL INSTALLATION

Before installation, verify that no packing material has been trapped in the tubing.
Prepare suitable stilts or fixing brackets depending on the fixing position of **CUBE**. The hose coming from the tank must be aligned to the threaded inlet of the pump filter which is located under **CUBE**.

9.2 HYDRAULIC CONNECTIONS

Maximum length of suction hose

The maximum length of the tubing, the diameter of the tubing, the difference in height, are parameters that are tightly linked to creating suction conditions. The latter must not be such as to create backpressure greater than 0.6 bar. It follows as a consequence that, after respecting the minimum diameter of the tubing specified in the "Attention" box below, the length of the tubing decreases as the difference in height that the diesel fuel must overcome increases and vice versa: in fact, the back pressure progressively increases by 0.08 bar for every meter increase in the static height of the pump with respect to the level of the diesel fuel in the tank.

ATTENTION

- Suction tubing must resist a pressure of at least 10 bar and must be of a diameter NOT LOWER than 1";
- tubing must be suitable to functioning under backpressure;
- use tubing and accessories suitable for use with diesel fuel. Materials that are not suitable for use with diesel fuel can cause damage to the pump, harm people and cause pollution;
- any curves in the suction hoses must be of the widest radius possible to limit the loss of head;
- make sure that the suction tubing is clean and free of scum.

EN

Installation of the check valve and filter

At the intake end of the hose, a check valve and a suction filter must be attached and must remain immersed at the bottom of the tank. The check valve and the filter are provided as part of the equipment with **CUBE** dispenser.

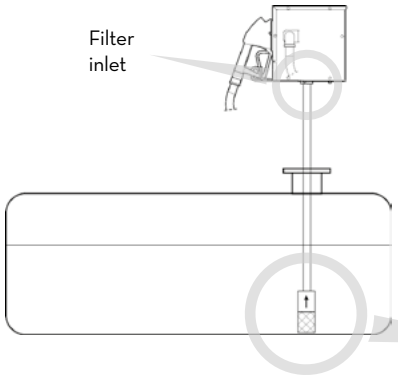

NOTE

Before connecting the tubing to the pump filter it is a good idea to fill the tubing with diesel fuel to facilitate priming the pump during the phase of putting it into operation.

Connecting the hose to CUBE

Screw the other end of the hose to pump filter.

ATTENTION

Do not use conical threaded connectors that could cause damage to the threaded connector on the pump filter.

9.3 ELECTRICAL CONNECTIONS

Electrical connections must be performed in a workmanlike manner by skilled personnel, respecting the regulations in effect in the country of installation.
The maximum acceptable variations from the electrical parameters are:
· *voltage* +/- 5%
· *frequency* +/- 2%

This manual is the property of PIUSI S.p.A. Any reproduction, even partial, is forbidden.

Connecting the CUBE 230 V AC single-phase

Simply introduce the cable with the Schuko plug into the hole at the bottom of **CUBE** and connect the plug to a grounded outlet of the household type.
Connect the ground wire to a grounding connection prepared according to regulations.

ATTENTION

CUBE dispensers are not equipped with circuit breakers. It is therefore strongly recommended to install on the plug a 30-mA residual current operated circuit breaker.

Connecting CUBE DC

Connect the power cord following the polarity and lock it as shown in the drawing.

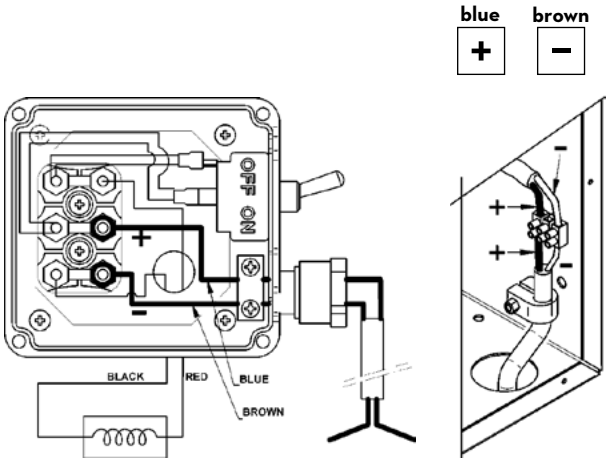

NOTE

The direction of the selector should be as shown in the picture.

Fuses:
- 24V version =30A
- 12V version =40A

Cables:
- for **CUBE DC** 24V use twin core cable with minimum conductor cross section of 4 mm².
- for **CUBE DC** 12V use twin core cable with minimum conductor cross section of 6 mm².

10. STARTING

Filling the pump

The pump provided with **CUBE** is a self-priming pump capable of suctioning an empty hose, nevertheless, the pump should be partially filled with diesel fuel before turning it on for the first time.
It is left to the technician's experience to determine the best way to fill the pump.

EN

Priming the pump

It is advisable to oversee the first priming phase to make sure that this is happening in a reasonable amount of time: depending on the length and fill status of the priming hoses, the priming of the pump can require from several seconds to several minutes, as a function of the characteristics of the system.

ATTENTION

If this phase is excessively prolonged, stop the pump and verify that:
- the pump is not running completely dry;
- the suction tubing is air-tight and completely immersed in the fluid to be pumped;
- the suction filter is not clogged;
- the difference in height for priming is not greater than 3 meters;
- the residual air in the hoses has been evacuated.

CUBE is compatible with automatic type nozzles. Air bleeding may prove difficult due to the automatic stop device, which keeps the valve closed when the line pressure is too low. Temporarily detach the automatic nozzle during the commissioning procedure.

Calibrating the meter

Before using the **CUBE** station, check METER ACCURACY.
For this purpose, proceed as follows:
- take out the nozzle and start the pump as described in the above paragraph;
- run the fuel into a calibrated container.

NOTE

Differences up to 0.2 litres out of every 20 litres fall within the guaranteed accuracy of +/- 1%.

If accuracy is NOT satisfactory, proceed to CALIBRATE THE METER:

1 · Bleed all air from the system (pump, hoses, flow meter) by delivering fluid until obtaining a full and even flow.
2 · Stop delivery by closing the dispenser nozzle without stopping the pump.
3 · Reset the partial counter by means of the reset knob (see: "how to dispense fuel" in paragraph 11).

This manual is the property of PIUSI S.p.A. Any reproduction, even partial, is forbidden.

4 · Dispense the fluid at the flow rate for which you require the highest possible metering precision into a graduated container with minimum capacity of 20 litres. Do not reduce the flow rate to bring the level to the graduated area of the container; the correct technique is to start and stop the flow repeatedly without changing the flow rate until reaching the required filling level.

5 · Compare the indication on the graduated container (true value) with the reading on the flow meter (indicated value):
- · if the indicated value is higher than the true value, unscrew the adjuster screw.
- · if the indicated value is lower than the true value, tighten the adjuster screw.

6 · Repeat steps from 4 to 6 until the level of precision is satisfactory.

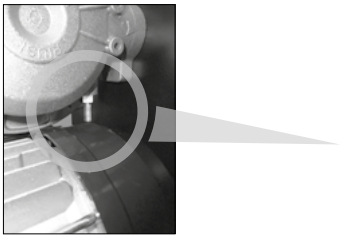

Turning on the CUBE

For all **CUBE** versions it is sufficient to:
· take the dispensing nozzle away from the rest;
· lift the rest (ON).





EN

11. INSTRUCTIONS FOR USE

ATTENTION

Transfer of fuel must always occur in the presence and under the control of the operator.
Keep the dispensing nozzle closed until it is inserted in the container to be filled.
If the nozzle lever is not completely pressed, the automatic release device will not work.

How to dispense fuel





1 · Rotate the reset knob in a counter-clockwise direction to completely zero-out the partial indicator.
The total indicator cannot be reset to zero.
2 · Extract the dispensing nozzle (a) and insert it in the container to be filled.
3 · Set the starting handle to position ON (b): the pump starts.
4 · Press the nozzle lever and keep it pressed until you have dispensed the desired quantity.
5 · When dispensing is finished, set the start handle to OFF (c): the pump stops. Replace the nozzle (d).
6 · Rehang the hose on the hose support hook, so that it will not be crushed by moving vehicles.

a



b

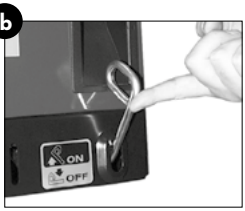

c



d



This manual is the property of PIUSI S.p.A. Any reproduction, even partial, is forbidden.

Power loss

An electrical power loss, with consequent undesired stoppage of the pump, may be caused by:
· tripping of safety systems;
· mains power failure.
Irrespective of the cause, proceed as follows:
1 · close the automatic nozzle;
2 · set the start/stop lever to the OFF position and stow the nozzle in its seat;
3 · after having established the cause of the stoppage resume the procedures as described in this section "How to dispense fuel".

12. MAINTENANCE

Opening and closing CUBE

1 · Screw off and remove the cross-head screws on the left side of the **CUBE** (fig. a).
2 · Screw off and remove the cross-head screws on the right side of the **CUBE** (fig. b).
3 · Raise the **CUBE** higher part.
To reclose it, perform these steps in reverse order.

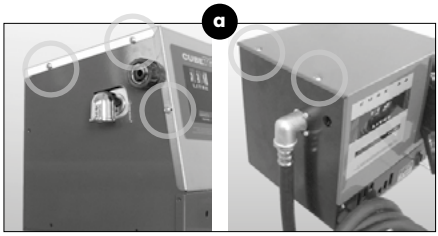

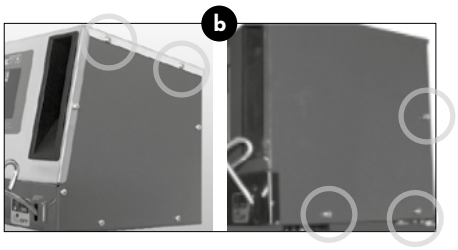

Periodic inspections

· Check weekly and keep the pump body, tubing and flanges clean to promptly reveal any leaks.
· Keep the dispensing nozzle hose clean and especially the hole for the excess pressure probe at the end of the nozzle hose.
· With equal frequency or at least every time the tank is filled, clean the filter and check valve at the bottom of the tank.
· Every three months (or more often in case of doubt) verify the accuracy of the meter.



EN

Cleaning pump filter

The pump filter must be cleaned weekly or more often whenever a reduction in flow rate is noticed.
The frequency required depends most of all on the quantity of fuel dispensed, but also on other causes as well, such as dispensing fuel immediately after refilling the tank, which stirs up sediment which normally lies at the bottom.
To gain access to the filter:
· Remove the upper part of the **CUBE** (and the side part for the version **CUBE 70**), by unscrewing the side screws (see "Opening and Closing **CUBE**");
· Screw off the 2 screws on the filter cover.
To clean it, it is sufficient to wash it and blow through it.

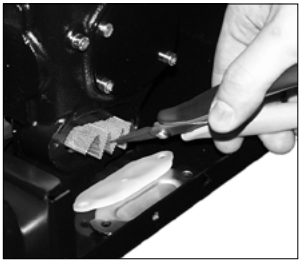

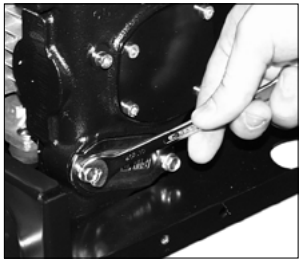

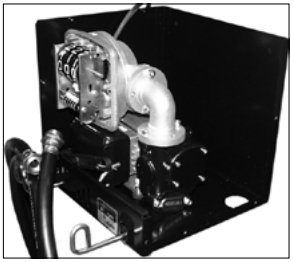

This manual is the property of PIUSI S.p.A. Any reproduction, even partial, is forbidden.

13. TROUBLESHOOTING

Problem	Possible causes	Possible solutions
The motor is not turning	Lack of electric power	· Make sure the operating lever is in ON position · Recock the external residual current circuit breaker · Check the electrical connections
	Fuses burned out	Change the fuses on the switchboard
	Faulty switch on electrical cabinet	Renew switch
	Motor problems	If the rotor is jammed, dismount and check for damage and obstructions, then remount, contact the Service Department
Motor won't start with nozzle closed	Electric voltage too low	Check that the voltage is not more than 5% below the nominal voltage
Low or no flow rate	Excessive suction pressure	Lower **CUBE** with respect to the tank or increase the diameter of the tubing
	High loss of head	Use shorter tubing or of greater diameter
	Suction pipe resting on the bottom of the tank	Raise the suction pipe
	Low level in the suction tank	Refill the tank
	Air entering the suction pipe or in the pump	Check the connections seal in the tubing and the level of diesel fuel in the tank
	Motor low rotation speed	Check the voltage at the motor: adjust the voltage and/or use cables of greater cross-section
	Check valve blocked	Clean or replace
	Tank filter clogged	Clean the filter
	Pump filter clogged	Clean the filter
	Fluid leaking	Check the seals of the connections and the condition of the rubber hoses
	Meter chamber obstructed	Clean the meter chamber
Meter is not accurate enough	Air in the suction line	Check the seals of the connections
	Measurement chamber fouled	Clean flow meter measurement chamber

EN

14. SPARE PARTS - CUBE exploded diagram

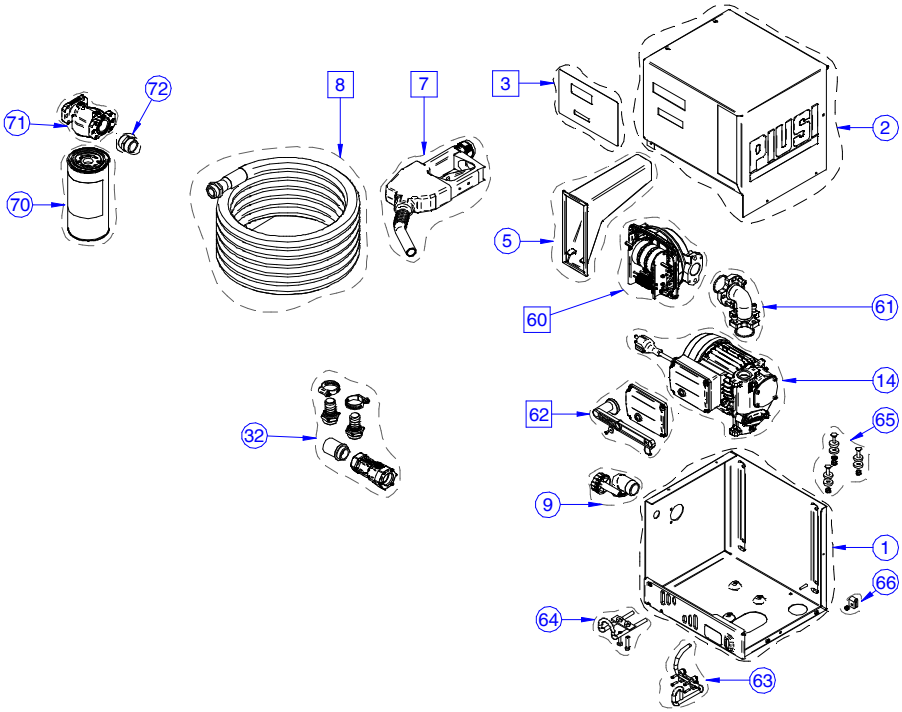

This manual is the property of PIUSI S.p.A. Any reproduction, even partial, is forbidden.

SPARE PARTS - Pump exploded diagram

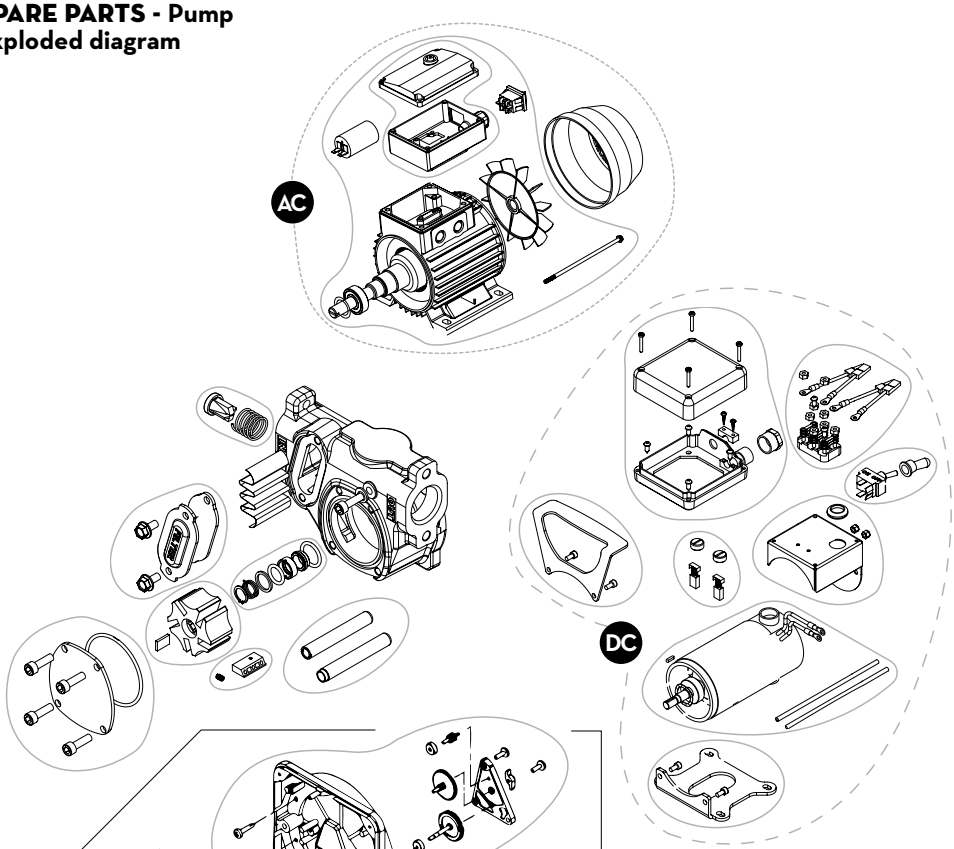

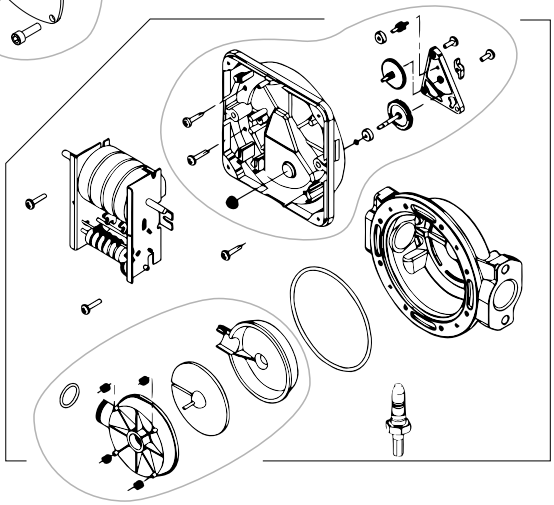

Meter exploded diagram

15. MANUFACTURER'S DETAILS AND AFTER-SALES SERVICE

Manufacturer:	**PIUSI S.p.A.**
Document Type:	**General description and instructions for its installation, activation, use and maintenance**
Edition:	**Bullettin M0097***
Product:	**Diesel fuel dispenser for private use with meter**
Model:	**All the models of CUBE range, with single-phase/three-phase mechanical/ electronic meter, with various voltages/ frequencies**
Conformity:	**CE MARK (see Declaration of Conformity)**
Technical Support:	**Provided by the Service Departments of our Authorized Resellers**

The information contained in this manual is provided by the manufacturer, who reserves the right to make changes without prior notice.

This manual is the property of PIUSI S.p.A. Any reproduction, even partial, is forbidden.

PIUSI

Fluid Handling Innovation

piusi.com

PIUSI SpA • Suzzara MN Italy

BULLETIN M0097E _ 01 EN

10.2024